Table 4–21 Wiring requirements

No.	Wiring requirements
1	Place the control unit and the drive unit in two separate control cabinets.
2	If multiple control cabinets are used, connect the control cabinets by using a PE cable with a cross-sectional area of at least 16 mm^2 for equipotentiality between the control cabinets.
3	If only one control cabinet is used, place different devices in different compartments of the control cabinet based on signal intensity.
4	Apply equipotential bonding to devices in different compartments inside the control cabinet.
5	Shield all communication (such as RS485) and signal cables drawn from the control cabinet.
6	Place the power input filter in a position near the input interface of the control cabinet.
7	Apply spray coating to each grounding point in the control cabinet.

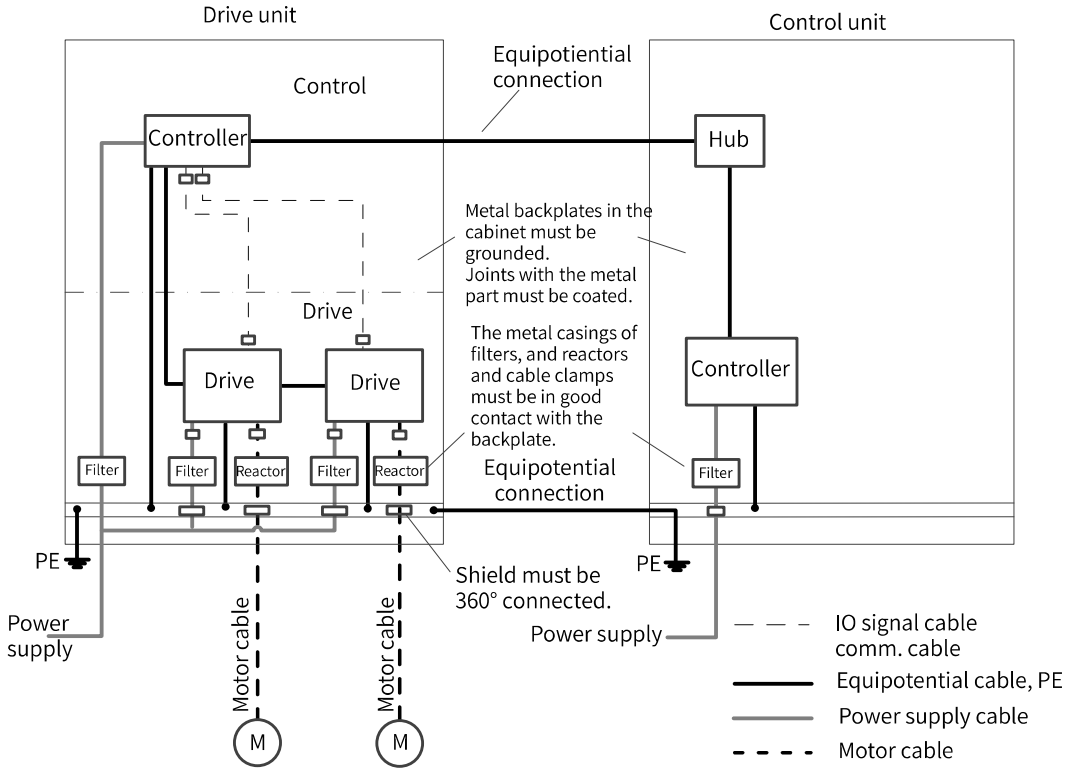

Figure 4-20 Recommended wiring for the control cabinet system

4.3 Description of Control Terminal (CN1)

Observe the requirements in standard EN 60204-1 during connecting control circuit cables.

I/O signal cable selection

It is recommended to use shielded signal cables to prevent I/O signal circuit from being disturbed by external noise. Use separate shielded cables for different analog signals. It is recommended to use shielded twisted pairs for digital signals.

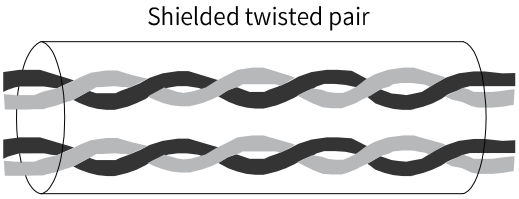

Figure 4-21 Diagram of shielded twisted pairs

Control Cable Specifications

Table 4–22 Recommended Control Cable Specifications

Control terminal	Connector Kit/Material No.	AWG
CN1	DB44	24 to 30

I/O signal layout

I/O signals include DI/DO signals and relay output signals.

Observe the following requirement during control circuit wiring:

Route the control circuit cables and main circuit cables or other power cables through different routes with a distance of at least 30 cm. Failure to comply may result in disturbed I/O signals.

4.3.1 Terminal Layout

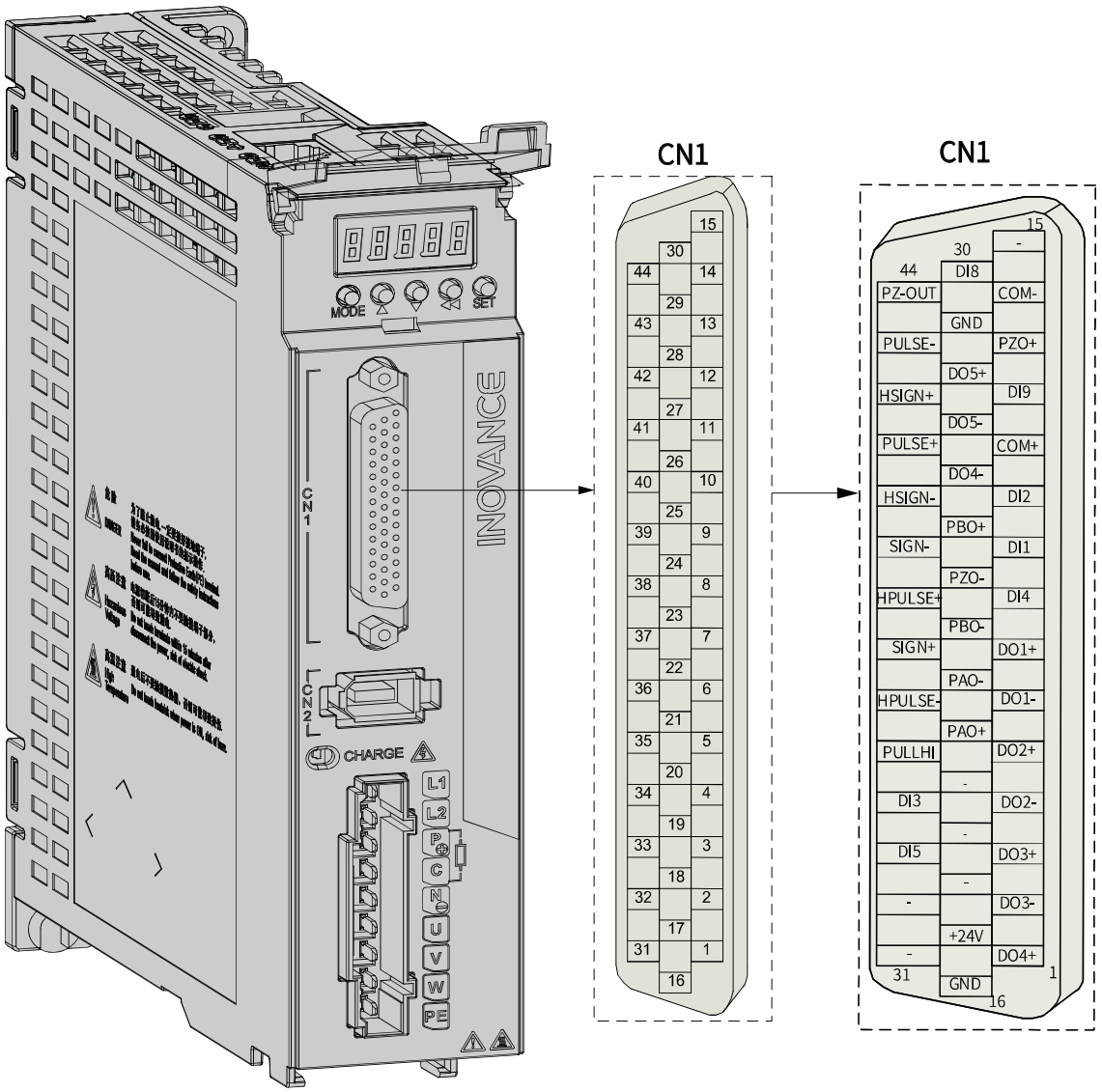

Figure 4-22 Control terminal pin layout of servo drives in sizes A and B

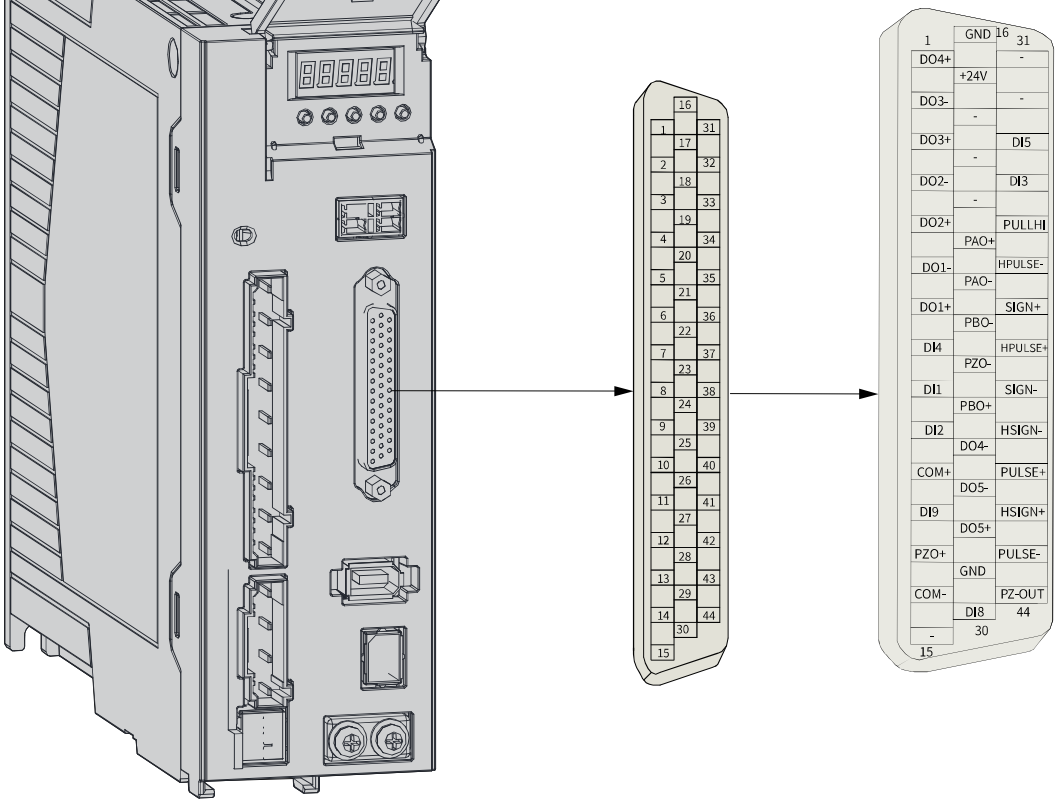

Figure 4-23 Control terminal pin layout of servo drives in sizes C, D, and E

Note

- CN1: Plastic housing of plug on cable side: DB25P (manufacturer: SZTDK), black housing. Core: HDB44P male solder (manufacturer: SZTDK).
- Use shielded cables as signal cables, with both ends of the shielded cable grounded.

Table 4–23 Position Reference Input Signals

Signal Name		Pin No.	Function	
Position reference	PULSE+	41	Low-speed pulse reference input mode: • Differential drive input • Open-collector	Pulse input form: • Direction+Pulse • Quadrature pulse of phases A and B • CW/CCW pulse
	PULSE–	43		
	SIGN+	37		
	SIGN–	39		
	PULLHI	35		
	HPULSE+	38	High-speed input pulse reference	
	HPULSE–	36		
	HSIGN+	42	High-speed position reference sign	
	HSIGN–	40		

Table 4–24 Description of DI/DO signals

Signal Name		Default Function	Pin No.	Function
General	DI1	P-OT	9	Positive limit switch
	DI2	N-OT	10	Negative limit switch
	DI3	INHIBIT	34	Pulse input forbidden
	DI4	ALM-RST	8	Alarm reset (edge-triggered)
	DI5	S-ON	33	Servo ON
	DI8	HomeSwitch	30	Home switch
	DI9	Reserved	12	-
	+24V		17	Internal 24 V power supply, voltage range: 20 to 28 V, maximum output current: 200 mA
	COM–		14	
	COM+		11	Common terminal of DI terminals.
	DO1+	S-RDY+	7	Servo ready
	DO1-	S-RDY-	6	
	DO2+	COIN+	5	Position reached
	DO2-	COIN–	4	
	DO3+	BK+	3	Brake output
	DO3-	BK-	2	
	DO4+	ALM+	1	Fault output
	DO4-	ALM-	26	
	DO5+	HomeAttain+	28	Homing completed
	DO5-	HomeAttain–	27	

Table 4–25 Encoder frequency-division output signals

Signal Name	Default Function	Pin No.	Function	
General	PAO+	21	Phase A frequency-division output signal	Quadrature frequency-division pulse output signals of phases A and B
	PAO–	22		
	PBO+	25	Phase B frequency-division output signal	
	PBO–	23		
	PZO+	13	Phase Z frequency-division output signal	Home pulse output signal
	PZO–	24		
	PZ-OUT	44	Phase Z frequency-division output signal	Home pulse open-collector output signal.
	GND	29	Home pulse open-collector output signal ground	
	GND	16	-	
	PE	Housing	-	

4.3.2 Position Reference Input Signals

For descriptions of position reference input signals, see *"Table 4–23 " on page 68*.

The reference pulses and signs on the host controller side can be outputted through the differential drive or open-collector. The following table lists the maximum input frequency and minimum pulse width.

Table 4–26 Correspondence between pulse input frequency and pulse width

Pulse Mode		Max. Frequency (pps)	Minimum Pulse Width (us)	Voltage (V)
Low speed	Differential	200k	2.5	> 3.0
	Open-collector	200k	2.5	24
High-speed differential		4M	0.125	> 3.0

Note

- You can either use high-speed pulses or low-speed pulses, but not both of them together.
- If the output pulse width of the host controller is smaller than the minimum pulse width, a pulse receiving error will occur on the drive.
- The symbol represents shielded twisted pairs.

Low-speed pulse reference input

- Differential mode

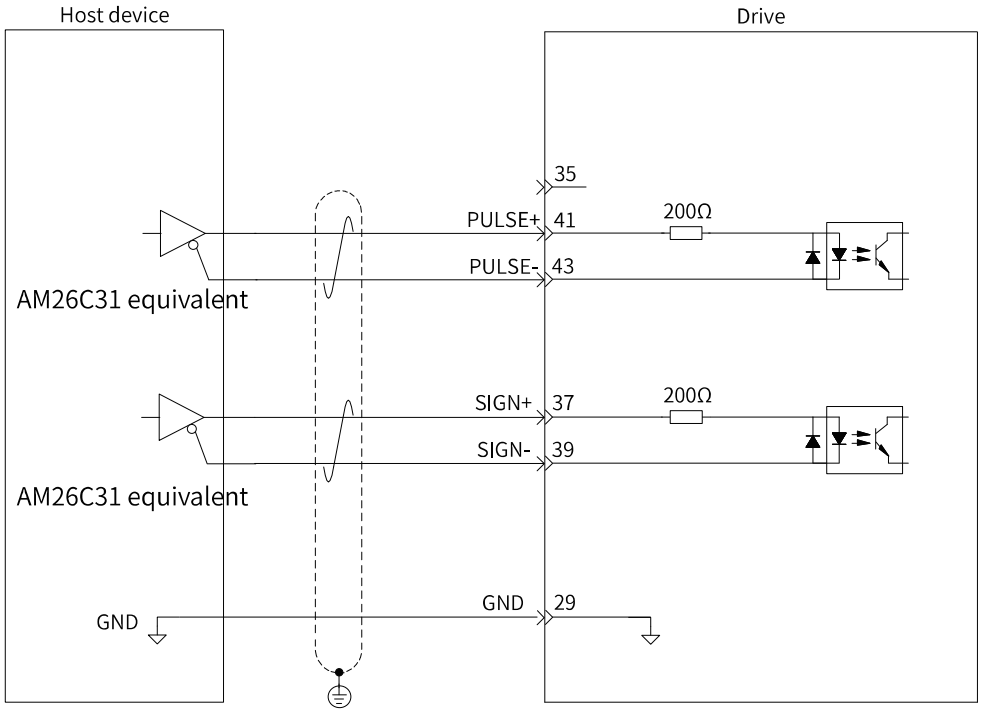

Note

This is a 5 V system. Do not input 24 V power.

- Open-collector mode
  ① For use of the internal 24 V power supply of the servo drive:

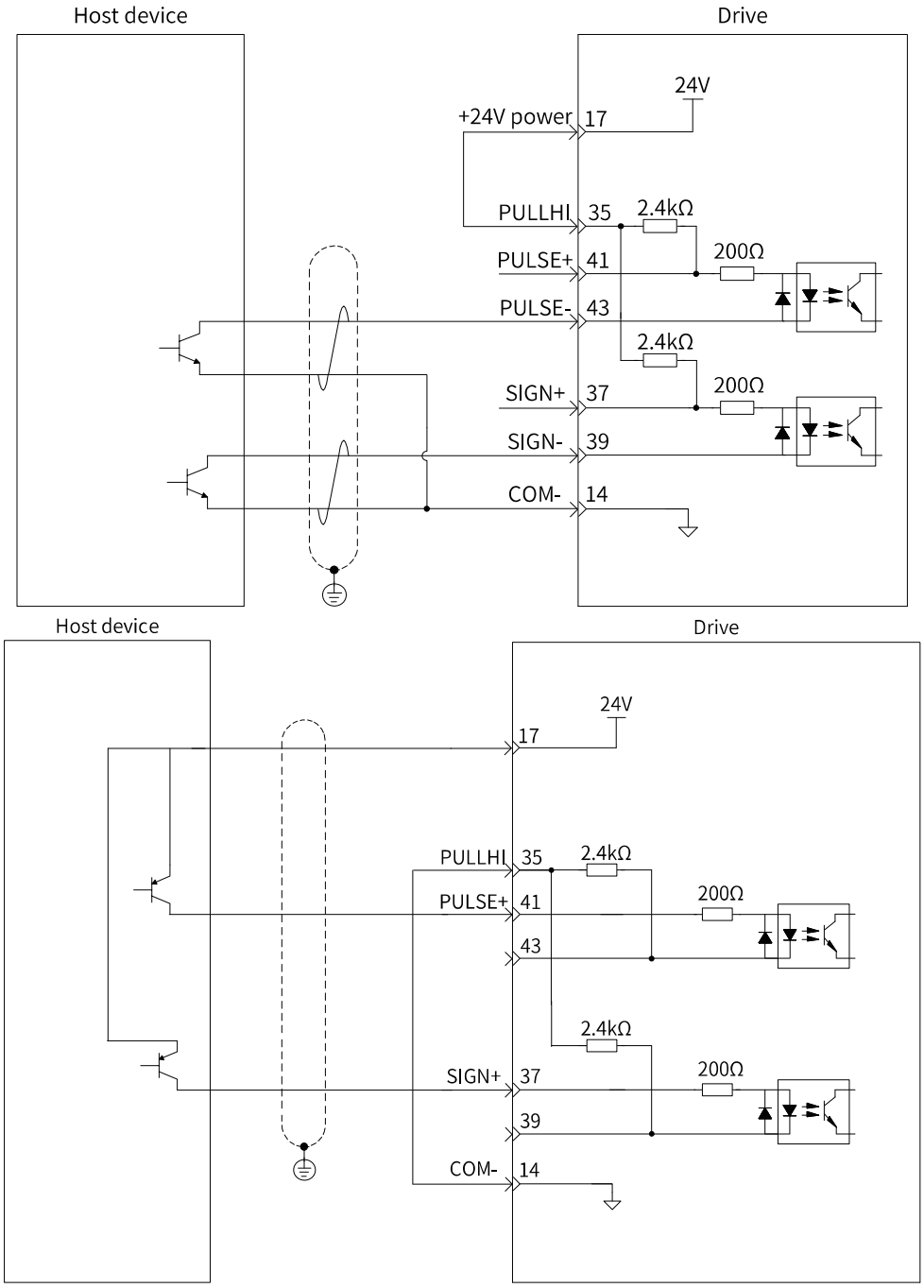

Figure 4-24 Correct: The internal 24 V power supply of the servo drive is used.

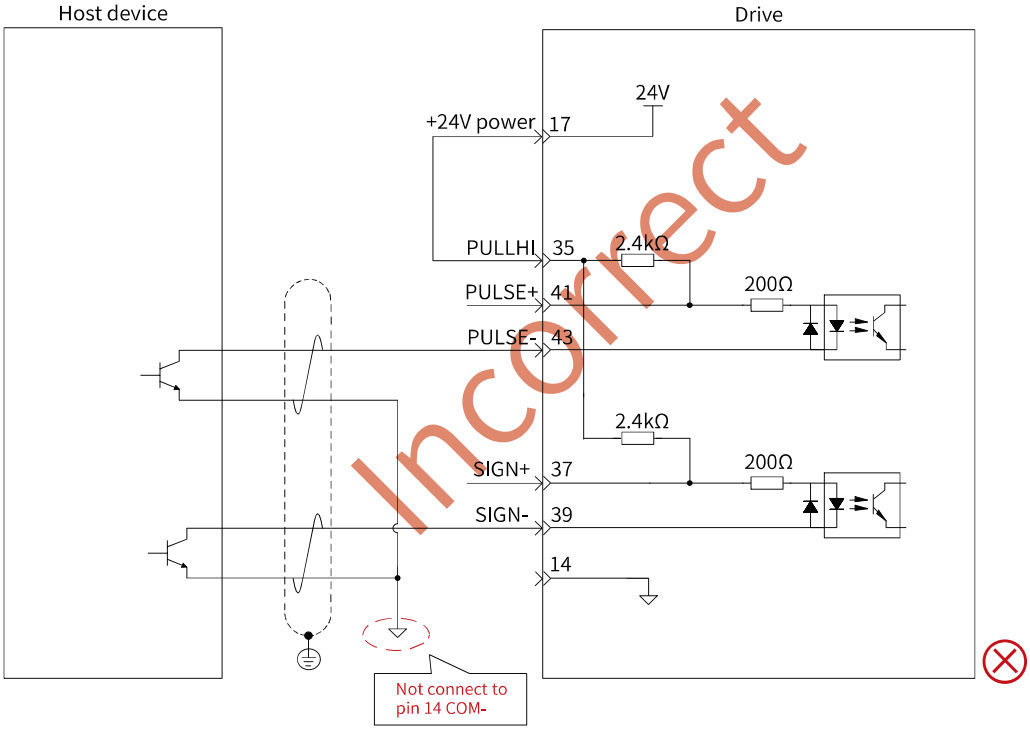

Figure 4-25 Incorrect: Pin 14 (COM–) is not connected, leading to failure in forming a closed-loop circuit.

When the external power supply is used:

- Scheme 1: Using the built-in resistor (recommended)

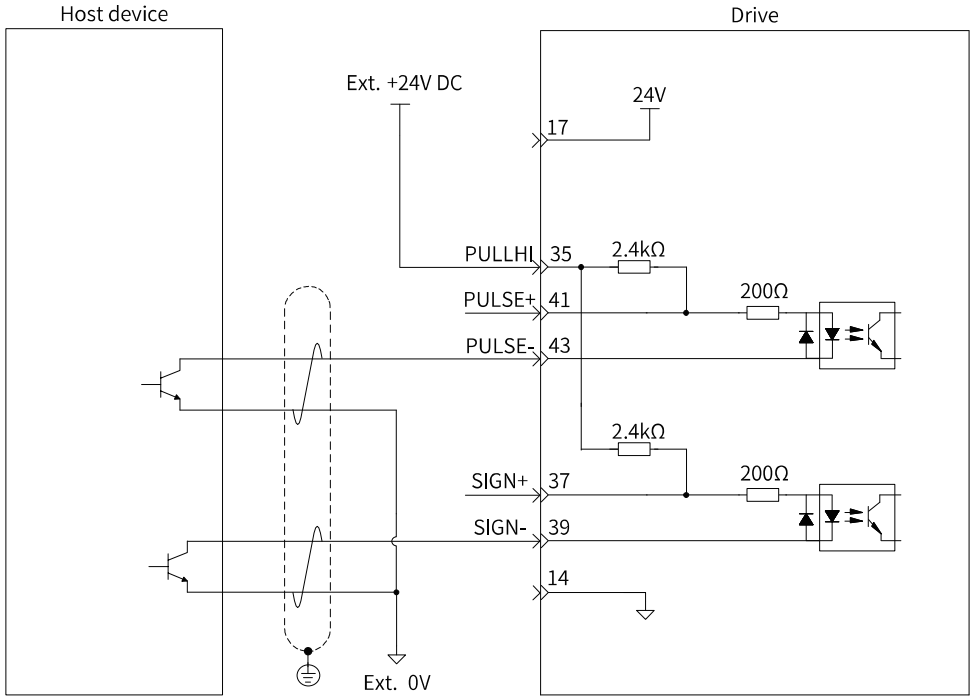

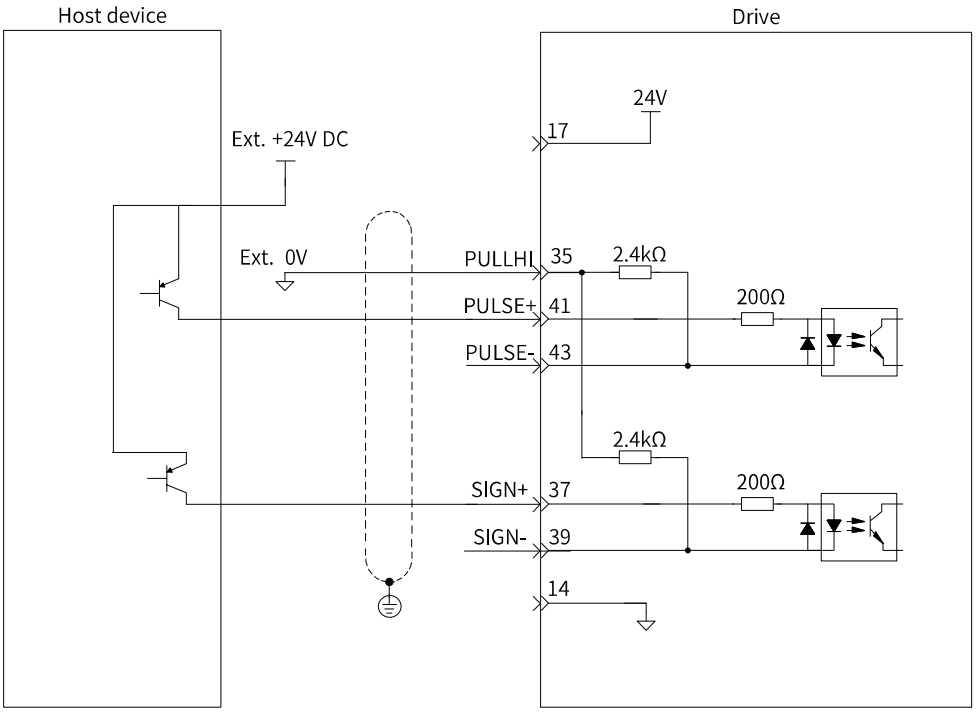

■ Scheme 2: Using the external resistor

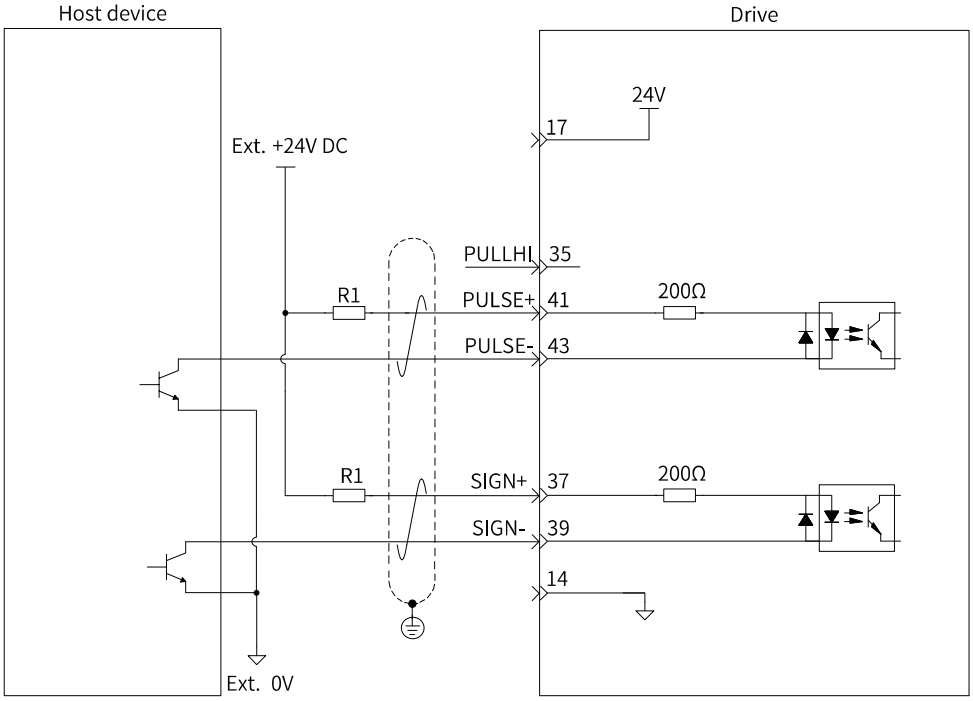

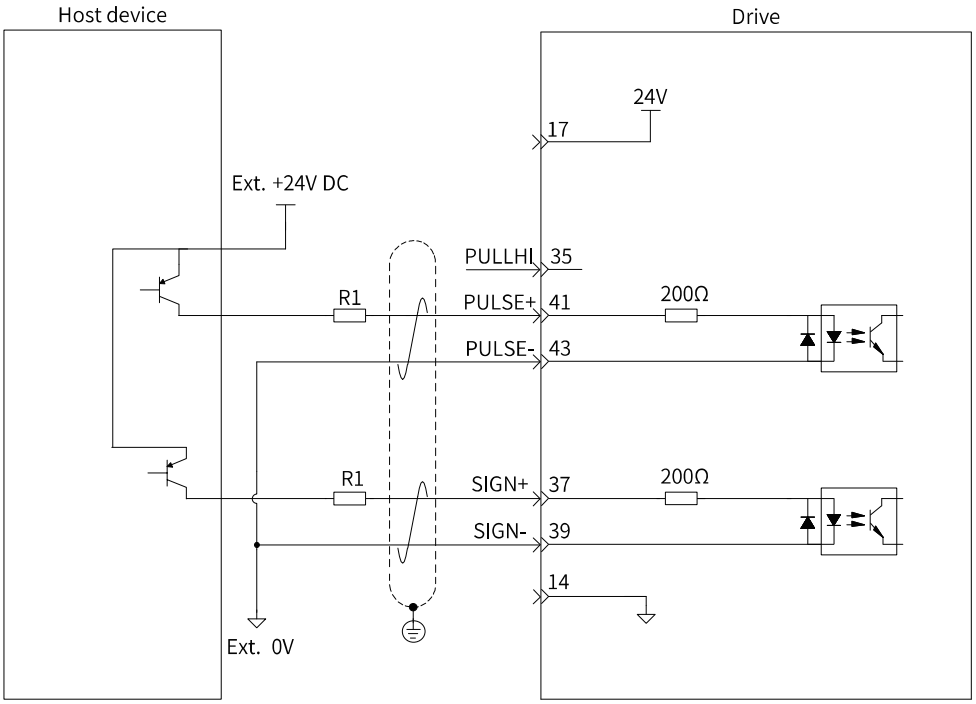

Select resistor R1 based on the following formula.

$$\frac{V_{CC} - 1.5}{R1 + 200} = 10\ mA$$

Table 4–27 Recommended resistance of R1

V_{CC} Voltage (V)	R1 Resistance (kΩ)	R1 Power (W)
24	2.4	0.5
12	1.5	0.5

- The following figures show examples of improper wiring.
- 1: The current limiting resistor is not connected, resulting in terminal burnout.

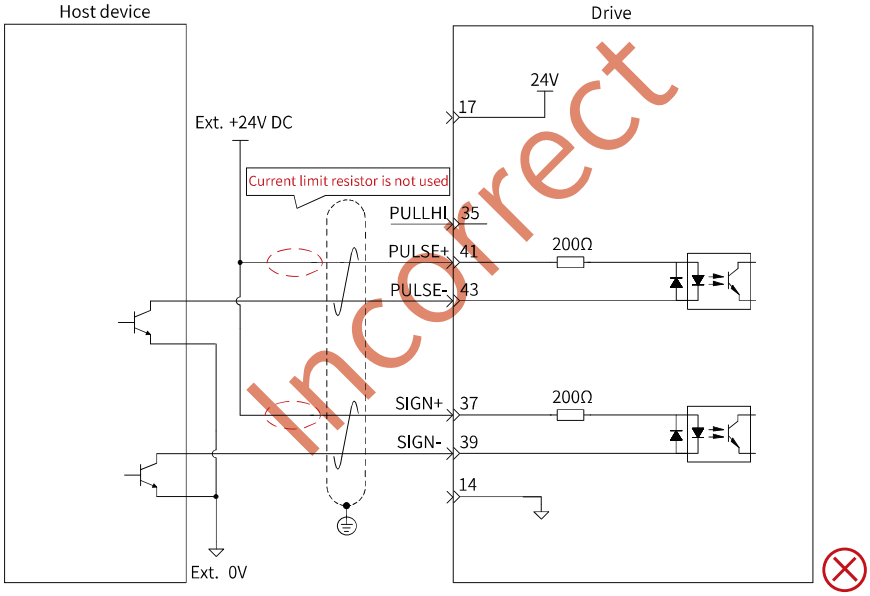

Figure 4-26 Incorrect wiring example 1: The current limiting resistor is not connected, resulting in terminal burnout.

Note

- Some models comes with a detection feature on SIGN+ and SIGN- to detect if SIGN + is connected to 24 V, SIGN- is connected to external 0 V, but no current limit resistor is connected. When this case is detected, the drive issues an E991.1 warning.
- In this case, check the wiring and then test the drive. Otherwise, the port may be damaged.
- This feature cannot detect polarity reversal.

■ 2: Multiple terminals share the same current limiting resistor, resulting in pulse receiving error.

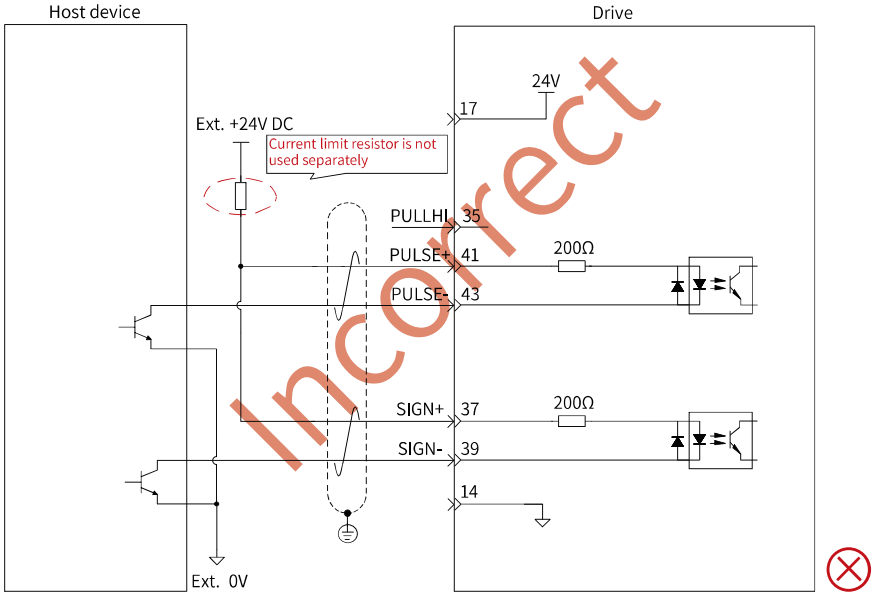

Figure 4-27 Incorrect wiring example 2: Multiple terminals share the same current limiting resistor, resulting in pulse receiving error.

- Incorrect wiring 3: The SIGN port is not connected, preventing these two ports from receiving pulses.

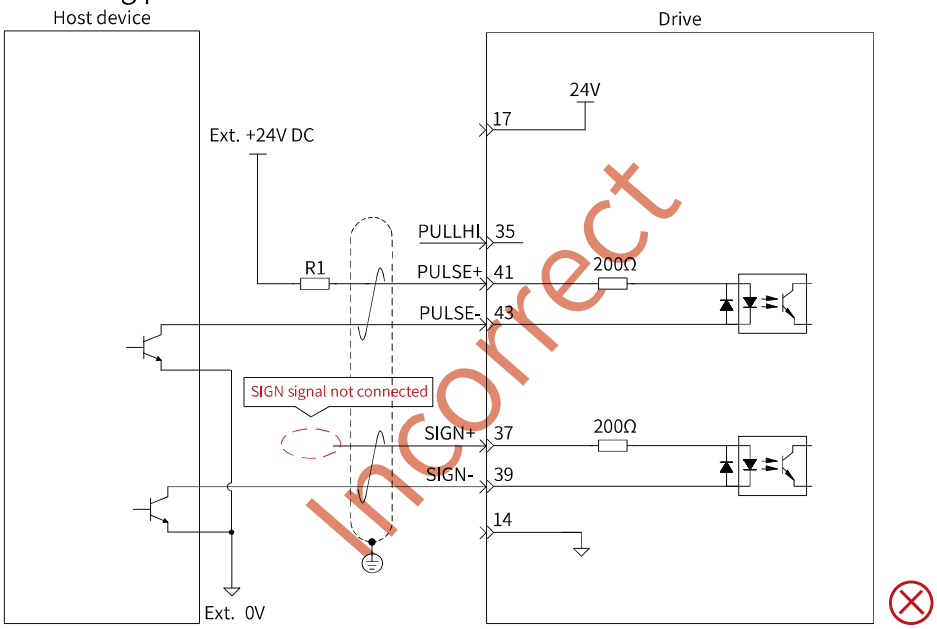

Figure 4-28 Incorrect wiring example 3: The SIGN port is not connected, preventing these two ports from receiving pulses.

- Wrong wiring 4: Terminals are connected incorrectly, resulting in terminal burnout.

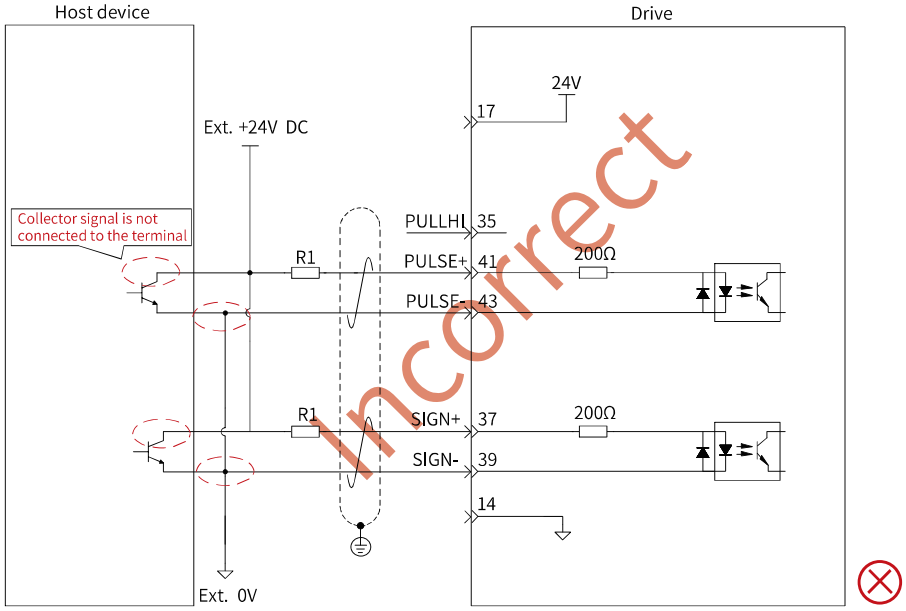

Figure 4-29 Incorrect wiring example 4: Terminals are connected incorrectly, resulting in terminal burnout.

- Wrong wiring 5: Multiple terminals share the same current limiting resistor, resulting in pulse receiving error.

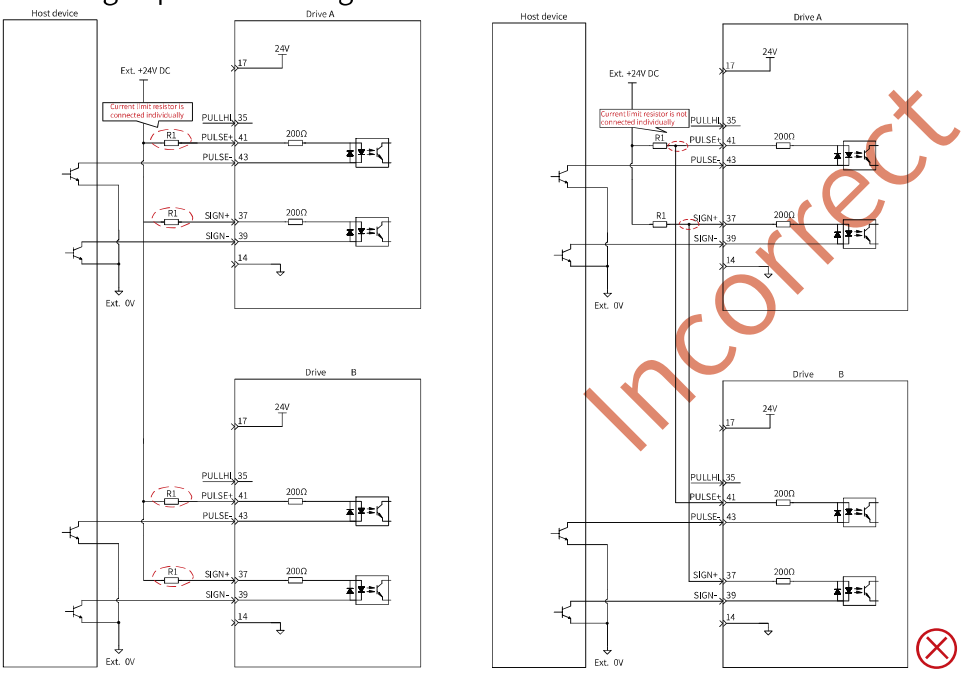

Figure 4-30 Incorrect wiring example 5: Multiple terminals share one current limiting resistor, resulting in a pulse receiving error.

High-speed pulse reference input

High-speed reference pulses and signs on the host controller side can be outputted to the servo drive through the differential drive only.

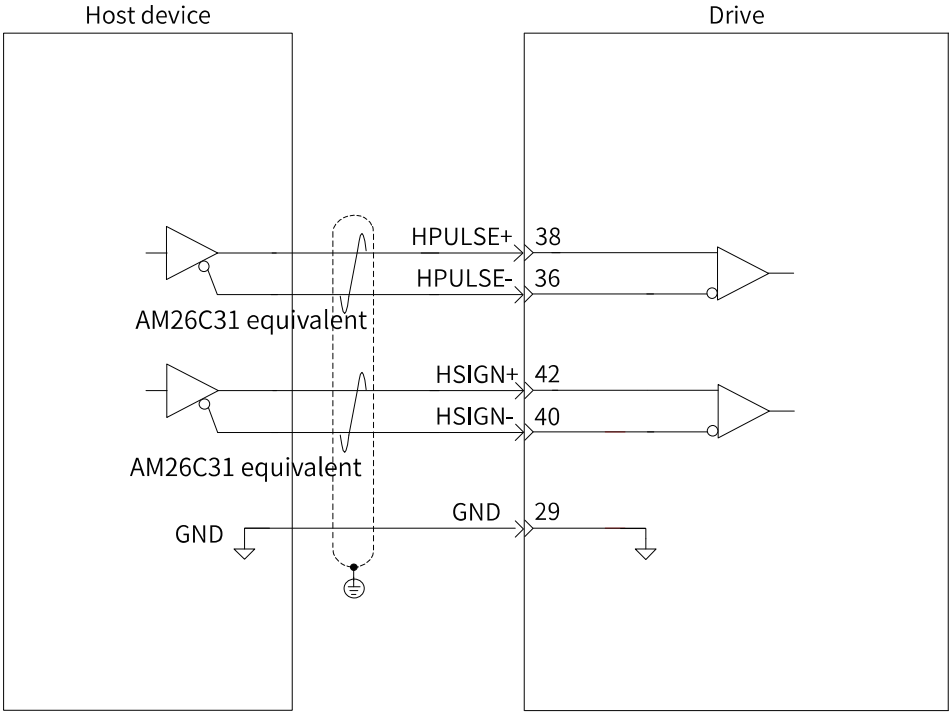

Note

- This is a 5 V system. Do not input 24 V power.
- Some models comes with a detection feature on HSIGN+ and HSIGN- to detect if HSIGN+ is connected to 24 V, HSIGN- is connected to external 0 V, but no current limit resistor is connected. When this case is detected, the drive issues an E991.1 warning.
- In this case, check the wiring and then test the drive. Otherwise, the port may be damaged.
- This feature cannot detect polarity reversal.

Caution

The differential input must be 5 V. Otherwise, unstable pulse input will occur on the servo drive, resulting in the following situations:

- Pulse loss during pulse input
- Reference inverted during reference direction input
- Connect 5 V GND of the host controller to the GND of the servo drive to reduce noise interference.

4.3.3 DI/DO Signals

For description of DI/DO signals, see *"Table 4–24 " on page 69*.

DI circuit

The circuits for DI1–DI5, DI8, and DI9 are the same. The following description takes DI1 circuit as an example.

- The host controller provides relay output:
  - When you use the internal 24 V power supply:

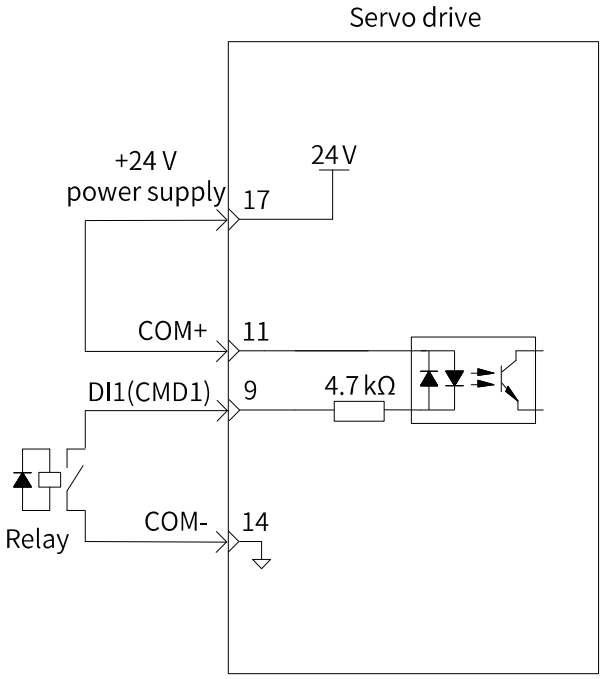

  - When you use an external power supply:

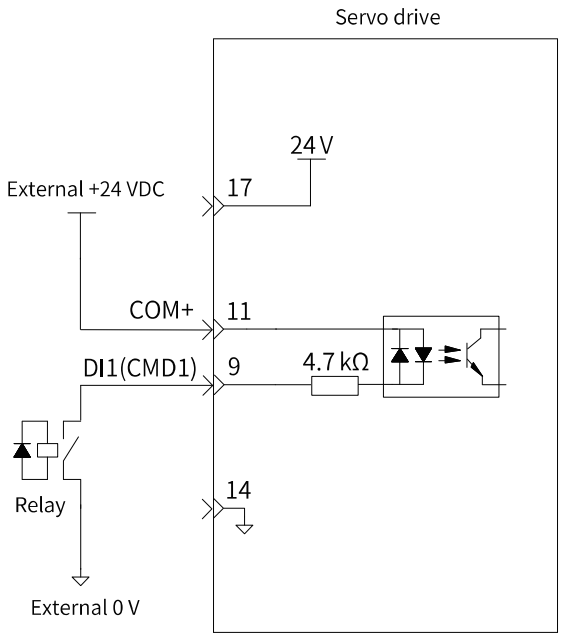

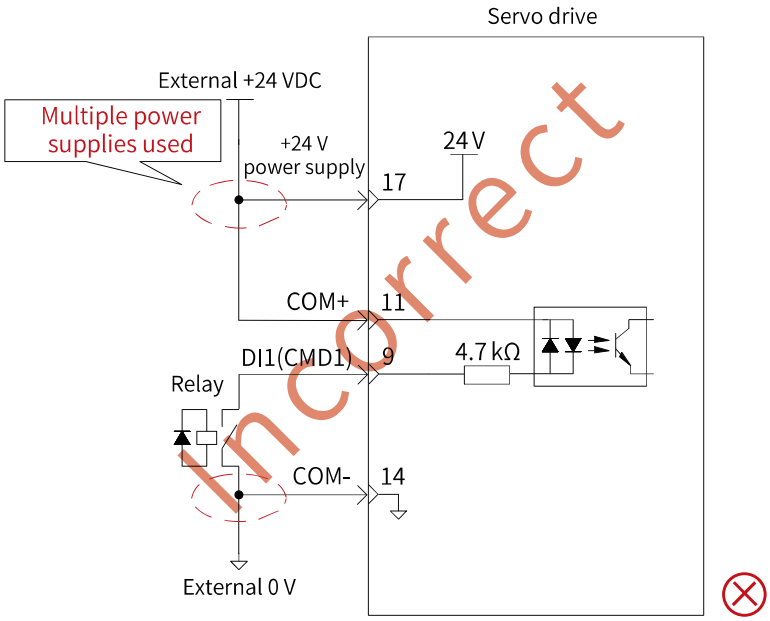

- The host controller provides open-collector output.
  - When you use the internal 24 V power supply:

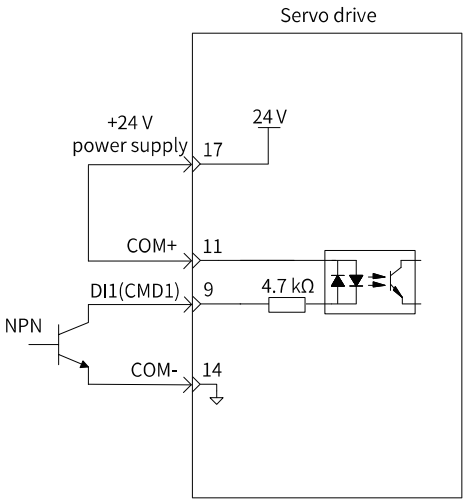

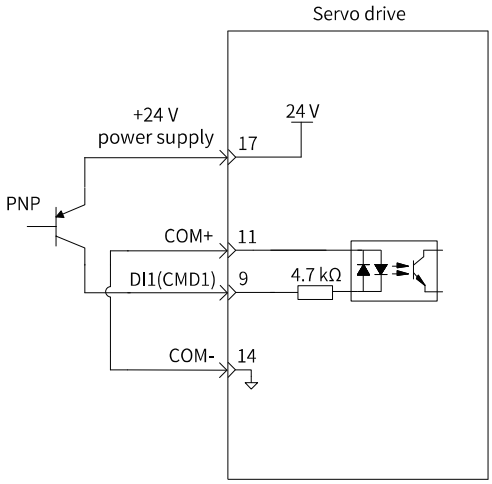

- When you use an external power supply:

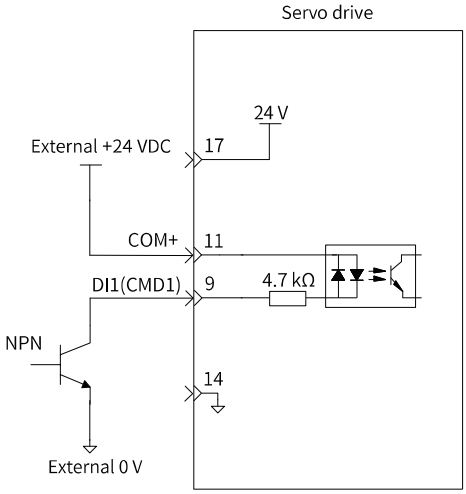

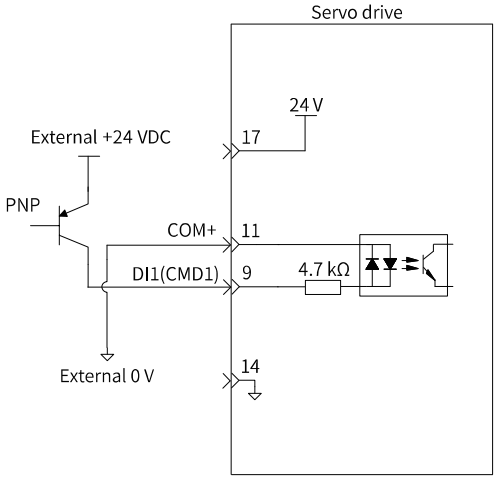

Note

PNP and NPN input cannot be used together in the same circuit.

DO circuit

The circuits for DO1 to DO5 are the same. The following description takes DO1 circuit as an example.

- The host controller provides relay input.

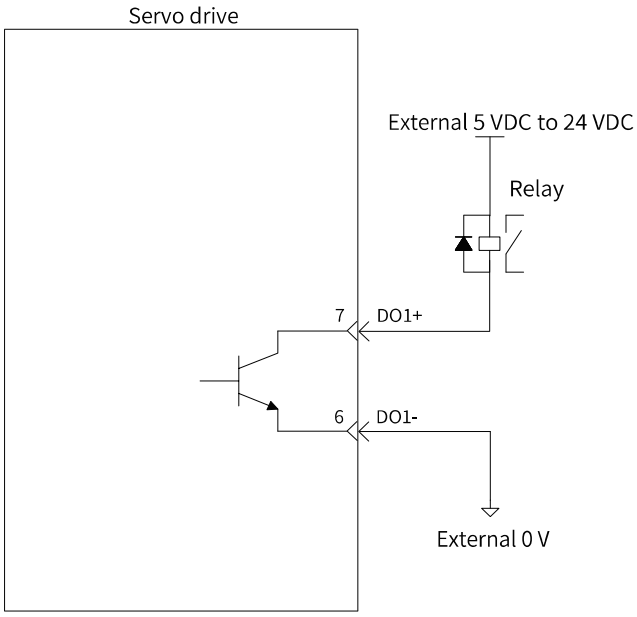

Note

When the host controller provides relay input, a flywheel diode must be installed. Otherwise, the DO terminals may be damaged.

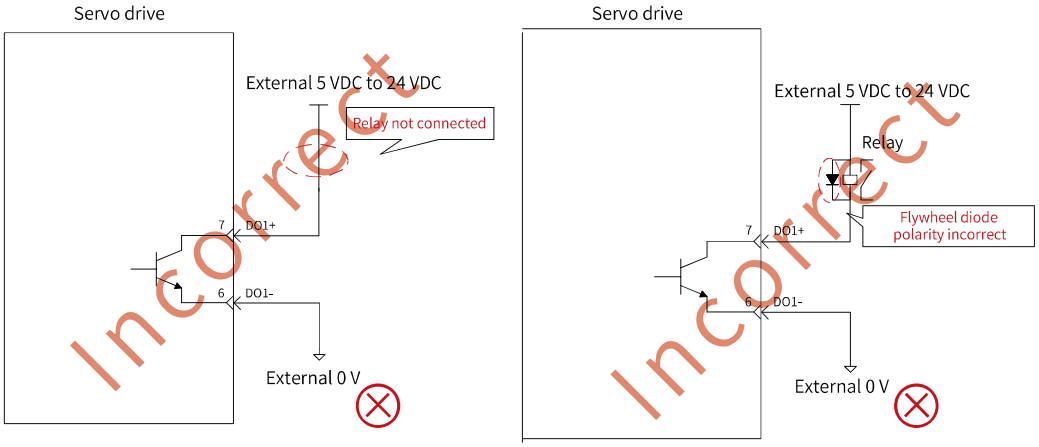

- The host controller provides optocoupler input:

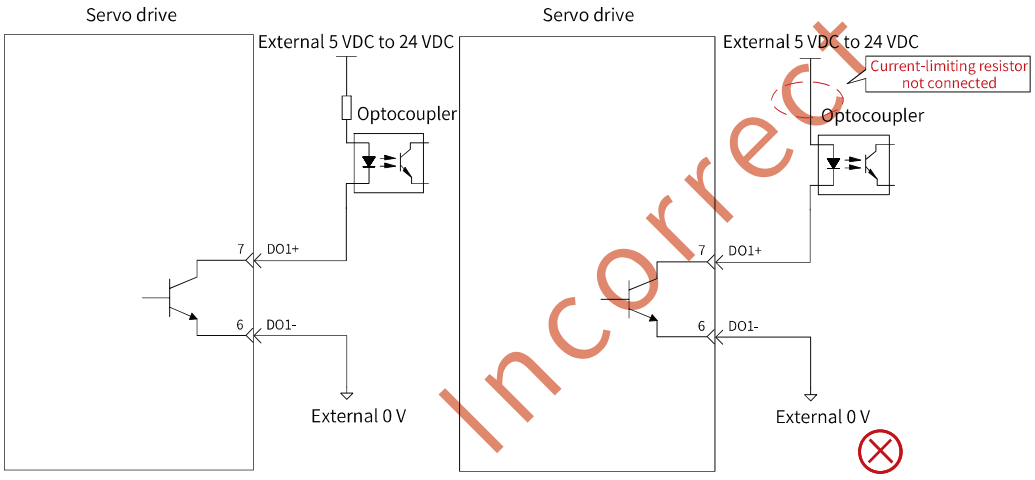

Note

The maximum permissible voltage and current capacity of the optocoupler output circuit inside the servo drive are as follows:

- Maximum voltage: 30 VDC
- Maximum current: DC 50 mA

4.3.4 Encoder Frequency-Division Output Signals

For details on encoder frequency-division output signals, see *"Table 4–25 Encoder frequency-division output signals" on page 70*.

Encoder frequency-division output circuit outputs differential signals via the differential drive. Typically, this circuit provides feedback signals to the host controller in a position control system. Use a differential or optocoupler receiving circuit on the host controller side to receive feedback signals. The maximum output current is 20 mA.

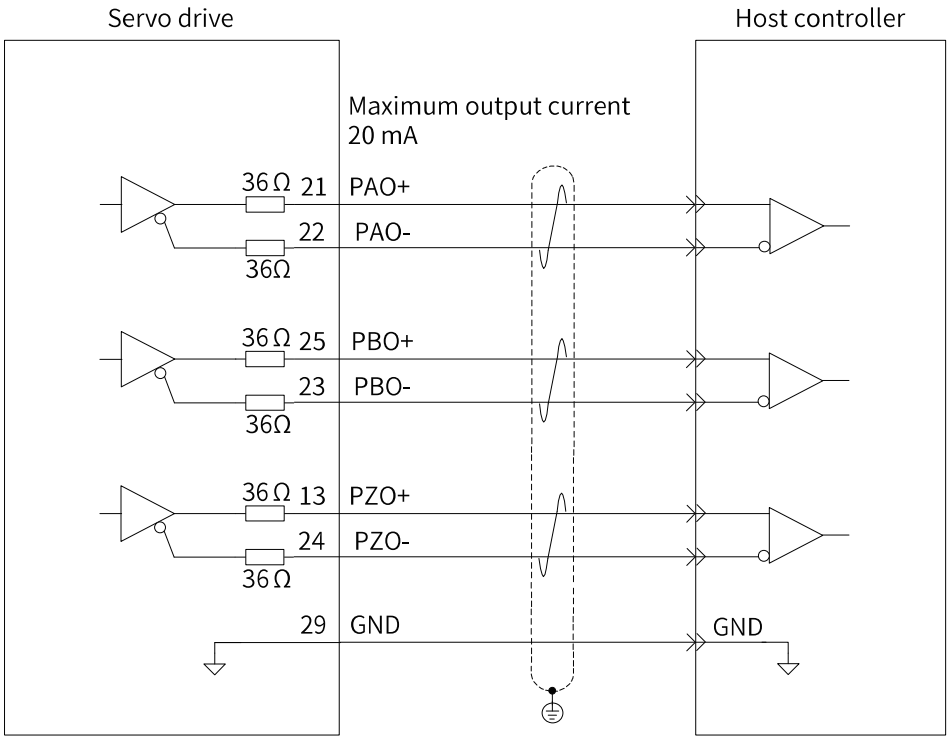

Figure 4-31 Differential receiving circuit

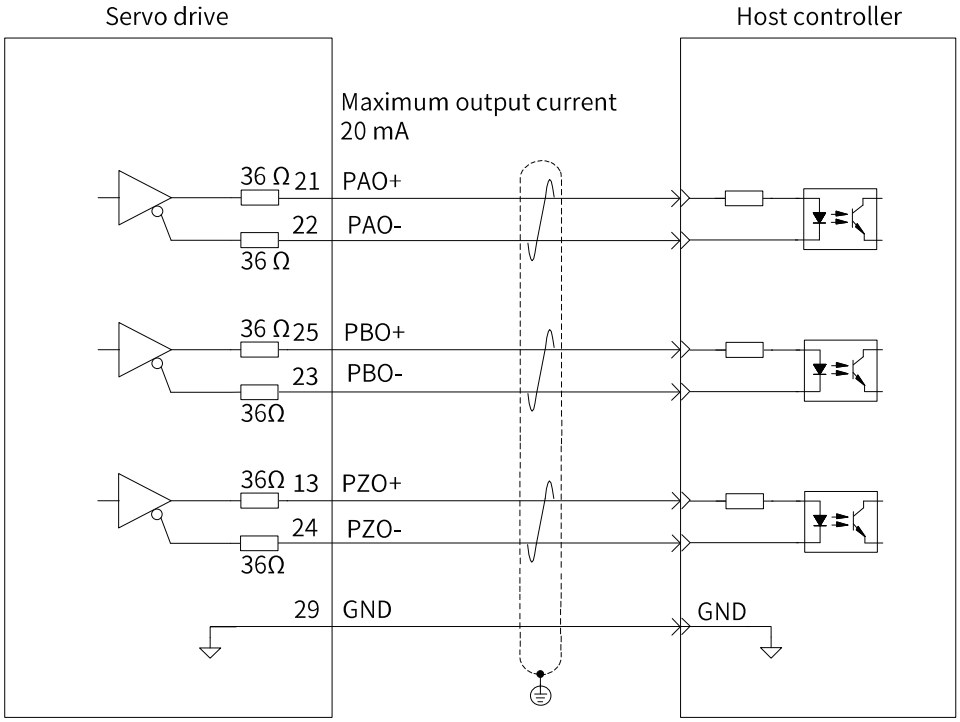

Figure 4-32 Optocoupler receiving circuit

Encoder phase Z output circuit outputs OC signals. Typically, this circuit provides feedback signals to the host controller in a position control system. An optocoupler

circuit, relay circuit, or bus receiver circuit shall be used in the host controller to receive feedback signals.

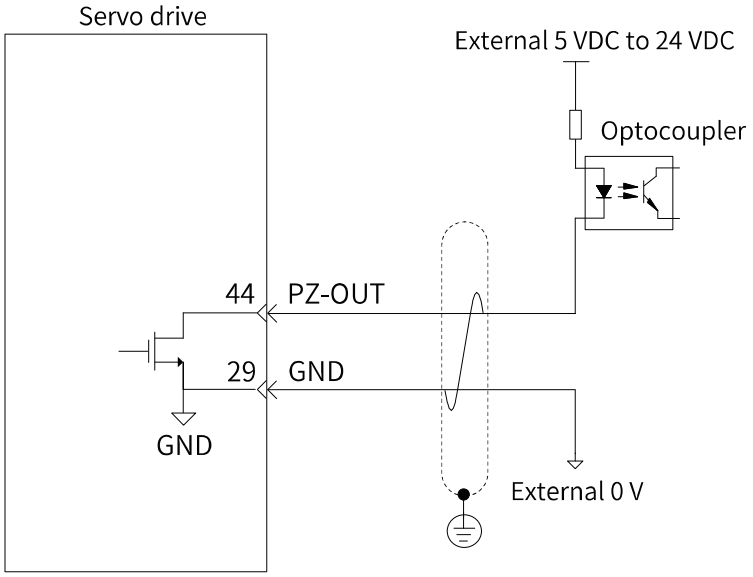

Caution

To reduce noise interference, use shielded twisted pairs to connect the 5V GND of the host controller to the GND of the servo drive.

4.3.5 Wiring of the Brake

The brake is used to prevent the motor shaft from moving and lock the position of the motor and the motion part when the drive is in the non-operational status.

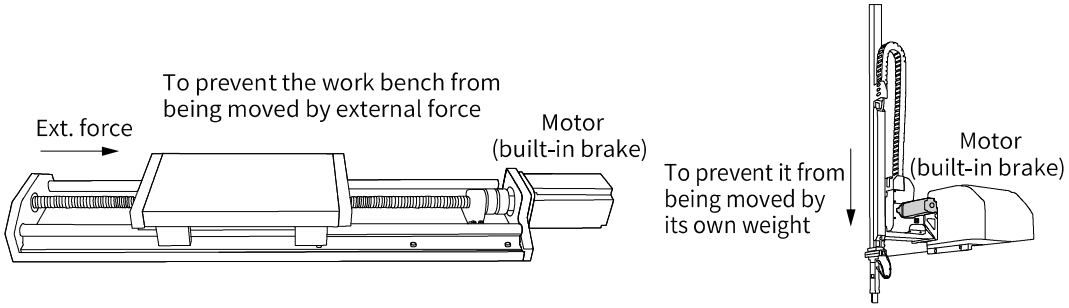

Figure 4-33 Application of the brake

Caution

- Use the built-in brake for position-lock purpose only. Do not use this brake for any other purposes (such as braking) other than position-lock in the stop state.
- The brake coil has no polarity.
- Switch off the S-ON signal after the motor stops.
- When the motor with brake runs, the brake may generate a click sound, which does not affect its function.
- When brake coils are energized (the brake is released), flux leakage may occur on the shaft end. Pay special attention when using magnetic sensors around the motor.

The connection of brake input signals is polarity-insensitive. Users need to prepare a 24 V power supply. The following figure shows the standard wiring of the brake signals (BK) and the brake power supply.

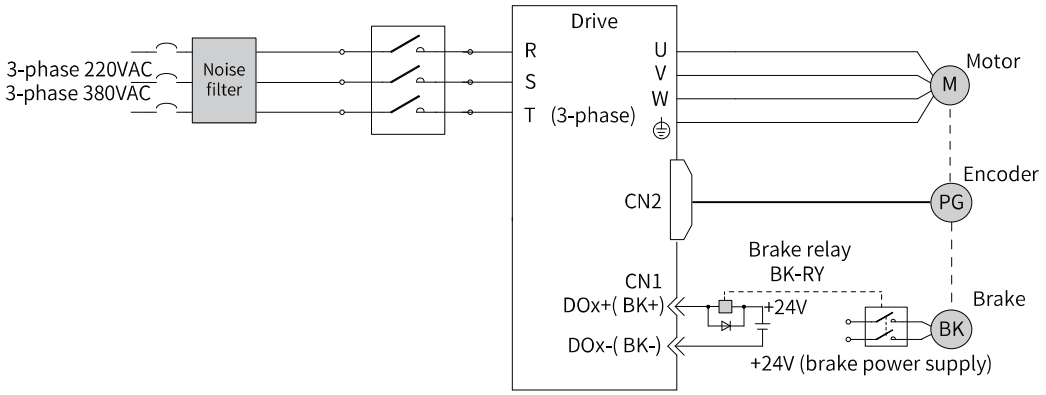

Figure 4-34 Wiring of the brake

Pay attention to the following precautions during wiring:

When deciding the length of the motor brake cable, take the voltage drop caused by cable resistance into consideration. The input voltage must be at least 21.6 V to enable the brake to work properly. The following table lists brake specifications of Inovance MS1 series servo motors.

Table 4–28 Brake specifications

Motor Model	Holding Torque (N·m)	Supply Voltage (VDC) ±10%	Coil Resistance (Ω)±7%	Exciting Current (A)	Release Time (ms)	Apply Time (ms)	Backlash (°)
MS1H1-05B/10B MS1H4-10B	0.32	24	94.4	0.25	⩽ 20	⩽ 40	⩽ 1.5
MS1H1-20B/40B MS1H4-20B/40B	1.5		75.79	0.32	⩽ 20	⩽ 60	⩽ 1.5
MS1H1-75B/10C MS1H4-75B/10C	3.2		57.6	0.42	⩽ 40	⩽ 60	⩽ 1
MS1H2-10C/15C/ 20C/25C	8		32.73	0.73	⩽ 40	⩽ 100	⩽ 1
MS1H2-30C/40C/ 50C MS1H3-85B/13C/ 18C	16		24	1	⩽ 60	⩽ 120	⩽ 1
MS1H3-29C/44C/ 55C/75C	50		18.58	1.29	⩽ 100	⩽ 200	⩽ 1

Note

- The brake cannot share the same power supply with other electrical devices. This is to prevent malfunction of the brake due to voltage or current drop caused by other working devices.
- Use cables with a cross-sectional area above 0.5 mm^2.

4.4 Encoder Terminal CN2

4.4.1 Terminal Layout

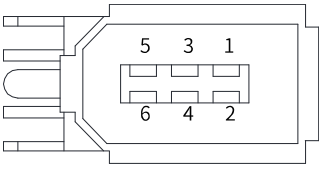

Encoder signal terminal CN2

Figure 4-35 Encoder terminal pin layout